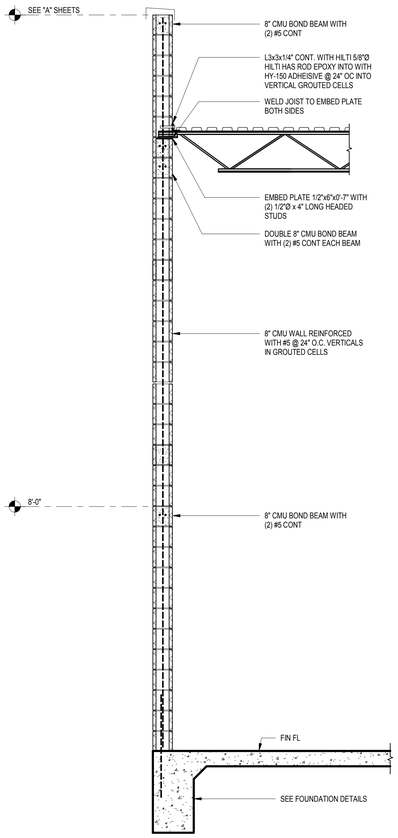

1 **SECTION**
1/2" = 1'-0"

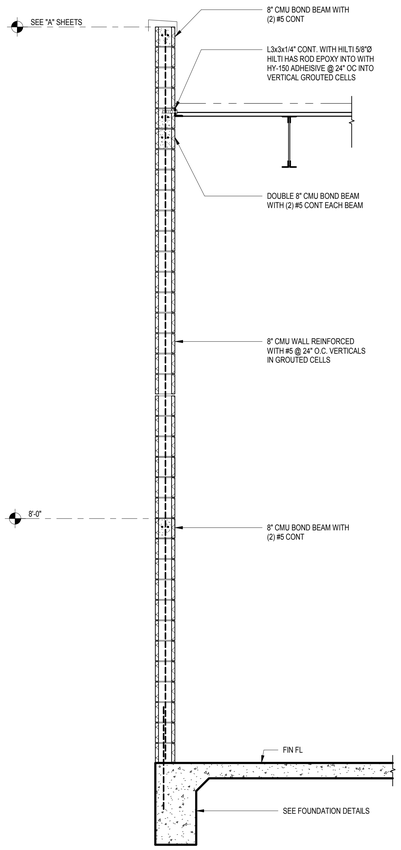

2 **SECTION**
1/2" = 1'-0"

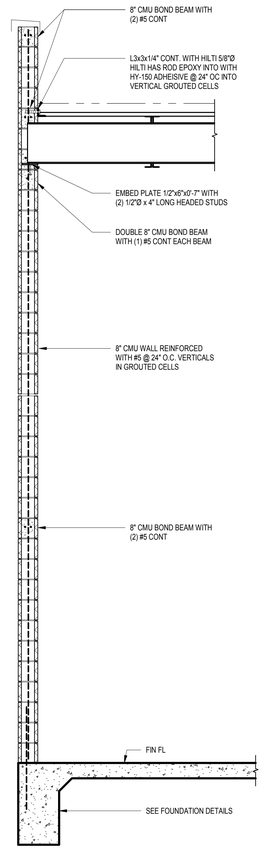

3 **SECTION**
1/2" = 1'-0"

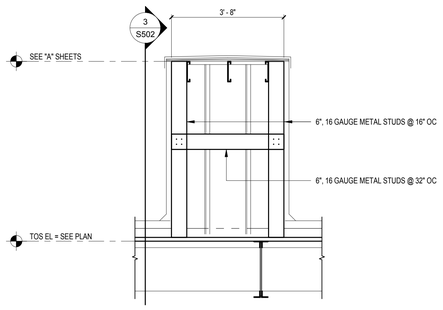

4 **SECTION**
1/2" = 1'-0"

Dally + ASSOCIATES
STRUCTURAL | CIVIL
9800 Richmond Avenue, Suite 460
Houston, Texas 77042
t 713 337 8881
Texas Registered Engineering Firm
F-003426
PROJECT: 19-013-00

02/13/2019
PERMIT / BID ISSUE

FRED DALLY
TEXAS REGISTERED
90904
PROFESSIONAL ENGINEER
DATE 02/13/19

CDA Architects
Member American Institute of Architects
2446 S State Hwy 249, Suite 200
Houston, Texas 77070
832/678-9432 Fax 832/678-9440

ASHTON GRAY DEVELOPMENT

FULL HEIGHT FRAMING SECTIONS

10,720 SF Retail Shell

SPRING STUEBNER @ SPRING PLAZA
SPRING, TEXAS 77389

SCALE: AS NOTED
PROJECT: 19-0-07
DATE: 02 / 13 / 19

S503